RUTLAND

ENHANCING LIFE SAFETY AT EVERY FIRE DOOR

SCISSOR ARM DOOR CLOSERS

TS.3204

t. +44 (0)1246 261491 | e. sales@rutlanduk.co.uk

rutlanduk.co.uk

SCISSOR ARM DOOR CLOSERS

TS.3204

The TS.3204 is a Certifire approved and ideal choice for mid-range contracts, with power size 3/4, adjustable by template, and optional back check.

- Available in Silver, Satin Nickel, Polished Nickel, Polished Brass White for next day delivery
- Easy to read instructions, saving over 12 minutes of fitting time
- Corrosion Grade 3 - Recommended for internal use

FD30 to FD120 Timber Doors

Opening Angle 180°

Two-Stage Speed Regulation

10 YEARS Guarantee

1100mm Max Door Width

80Kg Max Door Weight

Finishes

See page 96 for more detail

SE	SNP	PNP	WH	PVD
Silver	Satin Nickel	Polished Nickel	White	Polished Brass

IFC Certification

UKCA 1720

Approved Product CF 6018

CE 1812

Secured by Design

Product Features	TS.3204
Delayed Action	-
Back Check	TS.3204BC
Opening Angle	180°
Fig.1 Pull Side Door Width	300-1100mm
Fig.66 Push Side Door Width	470-950mm
Max Door Weight	<80kg
Power Adjustment	By Template
Hold Open (not for fire doors)	○
Dimensions (including cover)	W250 x H66 x D43mm
Certification Compliance	
Certifire (Not applicable for BC versions)	✓
UKCA	✓
CE	✓
BS EN 1154	✓
BS EN 1634	✓
UL10C	-
UL228	✓
ANSI BHMA	-
IFCC	✓
EPD 3.09E+01 kg CO_2 eq	✓

Key: ✓ Yes - No ○ Option

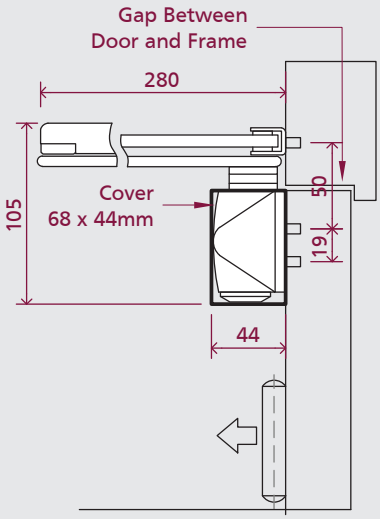

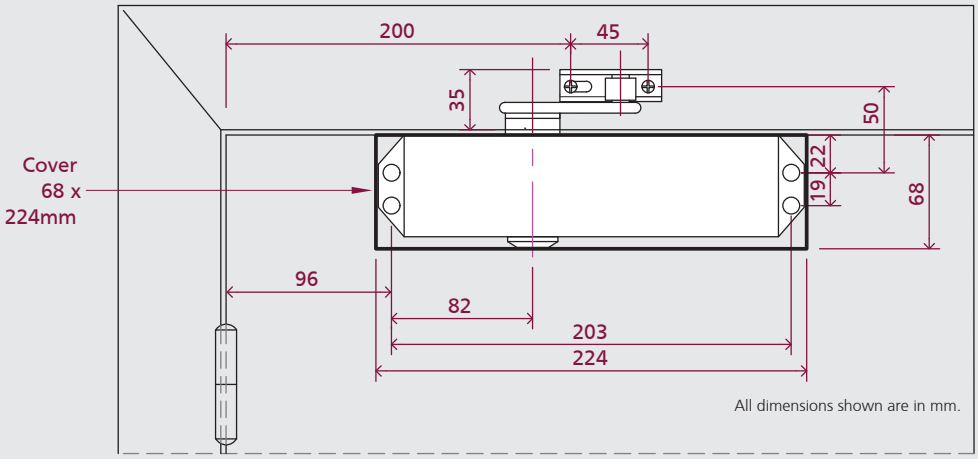

All dimensions shown are in mm.

For fitting instructions see website